ROYPOW TECHNOLOGY CO., LTD. has a policy of improving products continuously. All the information in this catalogue is provided for reference only. We reserve the right to make revisions as well as product alterations and improvements at any time without prior notice. Trademarks are the property of ROYPOW TECHNOLOGY CO., LTD. or their respective owners. Technical data and illustrations are not binding. We assume no liability for misprints.

Version: November 13, 2025, Electric Retrofit Solutions

ROYPOW

ROYPOW Technology Co., Ltd.

Tel: +86 (0)752-327 9099
Email: sales@roypow.com
service@roypow.com
marketing@roypow.com
Web: www.roypow.com
Add: ROYPOW Industrial Park, No. 16, Dongsheng South Road, Chenjiang Street, Zhongkai High-Tech District, Huizhou City, Guangdong Province, China

ROYPOW (USA) Technology Co., Ltd.

Tel: +1 512 688 5555 (Texas Office)
Email: sales@roypowusa.com
Email: service@roypowusa.com
Web: www.roypow.com
Head Office: 5901 Triumph St, Commerce, CA 90040, USA
Texas Office: 2350 Campbell Creek Blvd #100 Richardson, TX 75082, USA
Florida Office: 277 Douglas Avenue, Unit 1004, Altamonte Springs, FL 32714, USA
Indiana Office: 5545 W Raymond St, Ste H Indianapolis, IN 46241, USA
Georgia Office: 1150 Cobb International Pl NW Ste A, Kennesaw, GA 30152, USA

ROYPOW Technology UK Limited

Tel: 079 3818 1019 / 07425566908
Email: sales.uk@roypow.com
Add: Unit F, Argent Court, Hook Rise South, Surbiton, Surrey KT6 7NL

ROYPOW Australia Technology Pty Ltd

Email: sales@roypowtech.com.au
Tel: +61 29185 0814
Web: www.roypowtech.com.au
Add: Unit 9, 148 James Ruse Drive, Rosehill NSW 2150, Australia

ROYPOW (Europe) Technology B.V.

Email: sales.eu@roypow.com
Tel: +31 702 001 114
Web: www.roypoweurope.com
Add: K.P. van der Mandelelaan 84, 3062 MB Rotterdam, The Netherlands

ROYPOW Technology GmbH

Tel: +49 (0) 176 2358 8956
Email: sales.de@roypow.com
Web: www.roypow.gmbh
Add: Rosa-Parks-Straße 4, 64295 Darmstadt, Germany

ROYPOW株式会社

Tel: +81 090 7092 6969
Email: sales.jp@roypow.com
Web: www.roypow.co.jp
Add: 〒271-0094 千葉県松戸市上矢切299- 7

ROYPOW Technology Co., Ltd (Korea)

Tel: 1555-2016
Email: sales.kr@roypow.com
Add: 2405, GIDC Gwangmyeong station A Dong, 43 Iljik-ro, Gwangmyeong-si, Gyeonggi-do, Korea

ROYPOW Battery Technology (Pty) Ltd

Email: sales.za@roypow.com
Tel: +27 10 900 5808
Add: 53 Lake Rd, Longmeadow Business Estate, Edenvale, 1609, South Africa

PT ROYPOW HIGHTECH INDONESIA

Add: Horizon Industrial Park Factory, Type A, Lot 05, Sungai Pelunggut Sub-district, Sagulung District, Batam City, Riau Islands Province, Indonesia

ROYPOW ULTRA DRIVE

Electric Retrofit Solutions

for Commercial Vehicles / Construction Machinery / Special Vehicles

Save Up to 85% of Yearly Operation Costs

Economical | Easy-to-Install | Low-Carbon



Li-ion

sales@roypow.com
www.roypow.com

Scan it!

ROYPOW,
Your Trusted Partner

Contents

About Us

Introduction of Electric Retrofitt Solutions

Hybrid Mixer Drive System Case Study

Boom Lift Electrification Case Study

Excavator Electrification Case Study

Mobile Power Stations



ROYPOW
For One-stop New Energy Solutions

- R&D, manufacturing and sales of motive power systems and energy storage systems as one-stop solutions
- Fully automatic production lines, a full range of test equipment and an advanced MES
- Covering Complete Power Solutions for Off-Road Vehicles, Marine Power System, Jobsite ESS, Vehicle-Mounted ESS, and Electric Retrofit Solutions
- Self-development of power electronics technologies, including PCS, BMS, and EMS, as well as motor and controller motion control algorithms



750+ Employees

200+ R&D People

105,000 ㎡ Headquarters Floor Area

2,500 ㎡ Testing Center

310 Patents

Quality Control Certificates:

- Environmental Management System: **ISO 14001:2015**
- Occupational Health and Safety Management System: **ISO45001:2018**
- Quality Management System: **ISO 9001:2015, IATF16949:2016**
- Information Security Management System: **ISO/IEC 27001:2022**
- Social Accountability Management System: **SA8000:2014**
- Hazardous Substance Process Management: **IECQ QC 080000**



Product Certifications:

UL 1973, UL 9540A, UL 9540, UL 2580, UL 2271, UL 1741	FCC, IEC/EN 61000-6, BS EN IEC 61000-6
IEEE 1547	IEC 60730, ISO 13849-1
IEC 62619	UN 38.3
EN 62477, EN 62040, (EU) 2023/1542, EN 62109-1, EN 62109-2	RoHS Directive 2011/65/EU & (EU) 2015/863

R&D and Manufacturing Highlights

As a result of these investments, ROYPOW is capable of “end-to-end” integrated delivery, making our products out-perform the industry norms.

- Fully Automatic Production Lines
- BMS, PCS, EMS All Designed in House
- All-round Testing
- Advanced MES System

Global Sales and Service Network

- Timely Delivery
- Hassle-free After-sales Service
- Fast Response Technical Support

ROYPOW has comprehensively unfolded its overseas market layout to ensure the localization of R&D, manufacturing, marketing and service, becoming one of your most reliable and valuable partners.



Upgrading to New Technology, with Our Turnkey Solutions.

With years of dedication to new energy solutions, we are proud to offer customers professional solutions for:

- Complete Power Solutions for Off-Road Vehicles
- Marine Power System
- Jobsite ESS
- Vehicle-Mounted ESS
- Electric Retrofit Solutions
- Residential and C&I ESS



Why ROYPOW Electric Retrofit Solutions
Powering the Future of eMobility

Electrification has become the driving force of sustainable transformation in construction, specialty, and commercial vehicles. ROYPOW is advancing this shift with comprehensive electric retrofit solutions. Designed for performance, reliability, and safety, our electrification systems enable operators to cut emissions, reduce costs, and embrace a cleaner, smarter future of eMobility.

Economical

Engineered for long-term savings of up to 85% with lower fuel, operating, and maintenance costs.

Reliable

Built with automotive-grade design and validated with rigorous testing to ensure stable performance under the toughest conditions.

Intelligent

Integrated smart energy controls for optimized operational efficiency and extended range in every scenario.

Sustainable

Zero emissions, reduced noise, and cleaner power to meet the environmental targets.

Seamless Integration

All critical components are designed in-house for high system synergy and optimized energy and performance.

Highly Customized

Designed from the ground up to fit diverse vehicle types, working scenarios, and operational needs.



Products and Services



System Solution Design

Turnkey Engineering Service

Fossil Fuel to Electric System for Commercial Vehicles / Construction Machinery / Special Vehicles

Applications

We provide integrated products for aftermarket electrification retrofitting and factory-installed electric systems for the following vehicles (not limited to):



Wheel Loader



Excavator



Boom Lifts



Howo 375 Dump Truck



Off-Highway Mining Truck



Truck Mixer



Agricultural Machinery



Forklift Truck



Port Machinery



Special Custom Equipment

Matured Vehicle Retrofitting Example

Retrofitting Process

1. Design or select based on the customer's vehicle model
2. Remove the original fuel system
3. Install the following modular products

HV Electric Drive Modules:



Wheel Loader	Electric Controller	Motor for Driving	Motor for Air Pump	HV Battery	Thermal System
	x2	x1	x1	x1	x1

4. Testing and acceptance

Economic Estimation

Lists	Oil Wheel Loader	Electric Loader	Monthly Cost Differenece	Remarks
Fuel consumption per hour (L or kWh)	20L/h	35kWh/h		
Fuel price (RMB)	RMB 7/L	RMB 0.6/kWh		Using private EV chargers avoids public service charges, and charging during off-peak hours costs less.
Daily working hours (h)	12	12	+42,840	
Cost per month (RMB) (240h/month)	50,400	7,560		
Daily working hours (h)	24	24	+85,680	
Cost per month (RMB) (360h/month)	100,800	15,120		
Maintenance costs per month (RMB)	3000	2000	+1000	
Annual cost savings (working for 12 hours per day)				Each vehicle can save RMB 530,000 per year
Annual cost savings (working for 24 hours per day)				Each vehicle can save RMB 1,040,000 per year

Note: An example with a rated weight of 6 tons. There are differences in energy consumption among different tonnages and models

New Vehicle Retrofitting Example

Retrofitting Process



Requirements and Working Scenarios

- Basic parameter: Vehicle data (size, space, tonnage, power, etc.);
- Main operation scenarios (work instructions, continuous operation time, etc.);
- Current energy consumption;
- Customized new work scenarios;
- Normal/extreme conditions;
- After-sales service



Feasibility Analysis and Draft Plan

- Feasibility analysis and draft plan:
- System selection: motor, battery, electronic controller, etc.;
- Investment/benefit evaluation;
- First vehicle retrofitting target/cost/time;
- Batch retrofitting target/cost/time



Solution Confirmations

- Feasibility analysis and preliminary plan confirmation;
- Cooperation type confirmation;
- Project officially kicks off;
- Project plan and target confirmation:
- Target/costs/time



First Demonstration and Buyoff

- Detailed design
- Components preparation;
- Control system and software development;
- Removal of the original fuel system;
- Installation and adaptation of the electric drive system;
- System tuning;
- Testing;
- Pre-run;
- Acceptance evaluation



Batch Producation

- Batch production;
- quality control and assurance;
- End test of line;
- Acceptance process



After-Sales Service

- Warranty service;
- After-sales technical support;
- System maintenance;
- Components supply

Solutions

For Large-Scale Construction Equipment

We provide: **50kW~600kW** Motors	**30kWh~800kWh (400V~800V)** Batteries

Others: Energy Storage Cabinet and Energy Storage Charging Stations

For Small & Micro Construction Equipment

We provide: **3kW~50kW** Motors	**5kWh~40kWh (48V~96V)** Batteries

Mixer System Structure



System Topology of Electric Mixer

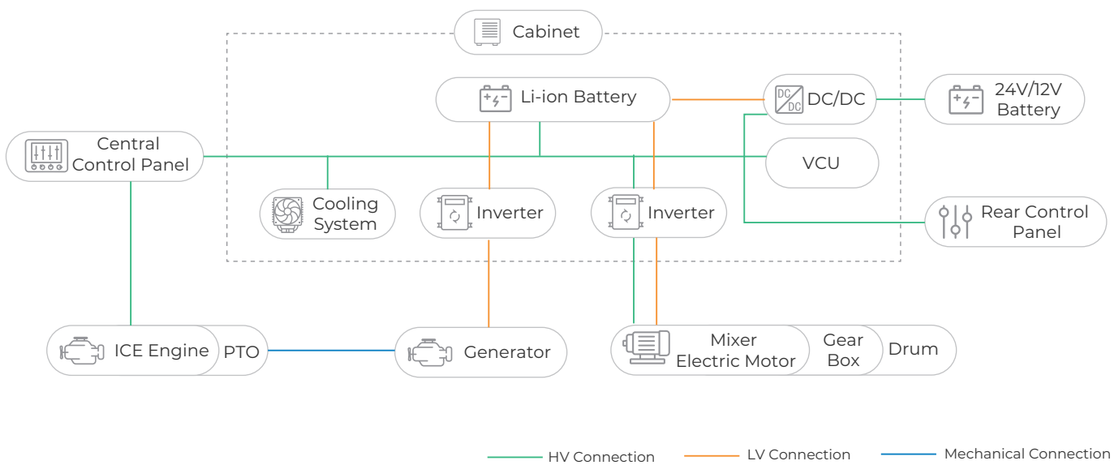

Operation Steps of Mixer Truck



Traditional Hydraulic Mixer

Idle	Loading / wet / dry mix + Initial cleaning	Transport to job site	Idle/mixing	Pouring/ washing/ cleaning	Transport to batch plant
Drum not rotate Engine could shutdown	Drum rotate foreward Engine ON	Drum rotate foreward Engine ON	Drum rotate foreward Engine ON	Drum rotate foreward Engine ON	Drum rotate foreward Engine ON



Electric Mixer

Idle	Loading / wet / dry mix + Initial cleaning	Transport to job site	Idle/mixing	Pouring/ washing/ cleaning	Transport to batch plant
Drum not rotate Engine could shutdown	**Drum rotate foreward Engine could shutdown**	Drum rotate foreward Engine ON	**Drum rotate foreward Engine could shutdown**	**Drum rotate foreward Engine could shutdown**	Drum rotate foreward Engine ON

Electric Consumption Calculation

- A typical case: 12m^3 drum
- 7.3 kWh battery, DoD is 60% (85%-25%), high C-rate
- 1 generator and 1 drive motor for drum
- No external charger need

Mixer Truck Opertion Steps	Loading	Wet / Dry Mix + Initial Cleaning	Transport to Job Site	Idling	Mixing	Pouring	Washing / Cleaning	Transport to Batch Plant	Total Generating (kWh)	Total Consumption (kWh)
Truck Opertion Time (Min)	10.00	10.00	28.00	18.00	2.00	15.00	10.00	28.00		
Drum Speed (rpm)	8.00	8.00	2.00	2.00	12.00	8.00	8.00	2.00		
Generator Agv. Torque (Nm)	\	\	80.00	\	\	\	\	80.00		
Generator Agv. Speed (rpm)	\	\	1400.00	\	\	\	\	1400.00		
Generator Agv. Power (kW)	\	\	11.73	\	\	\	\	11.73		
Generator Agv. Capacity (kWh)	\	\	5.47	\	\	\	\	5.47	10.94	
Drum Drive Motor Agv. Torque (Nm)	20.00	30.00	25.00	25.00	40.00	20.00	10.00	10.00		
Drum Drive Motor Agv. rpm (Nm)	3942.00	3942.00	985.50	985.50	5913.00	3942.00	3942.00	985.50		
Drum Drive Motor Agv. Power (kW)	8.26	12.38	2.58	2.58	24.77	8.26	4.13	1.03		
Drum Drive Motor Agv.Consumption (kWh)	1.38	2.06	1.20	0.77	0.83	2.07	0.69	0.48		9.49
SOC 25%-85%	66.1%	37.9%	85%	74.3%	62.9%	34.5%	25%	85%		
			If the battery is fully charged, the generator may stop			When the battery level is too low, the generator automatically starts		If the battery is fully charged, the generator may stop		

Drum Gear Ratio: **135.00** Motor Gear Ratio: **3.65** Power Calculate Factor: **9550.00**

Hybrid Mixer System



Traditional Hydraulic Mixer



PTO at the rear of the engine output

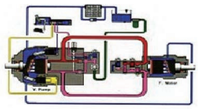

PTO-Driven Hydraulic System



Hydraulic-Driven Drum

Hybrid Mixer

PTO Input Shaft



Clutch Control

Transfer Case

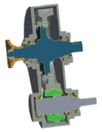

Connect the hydraulic system
(Same as Traditional Hydraulic Mixer)

Motor Input/Output





- When the motor drives the hydraulic system during rotation, battery provides energy;
- When the battery is low, the hydraulic system is driven by PTO, and the battery is recharged through the motor.

System Topology of Hybrid Mixer

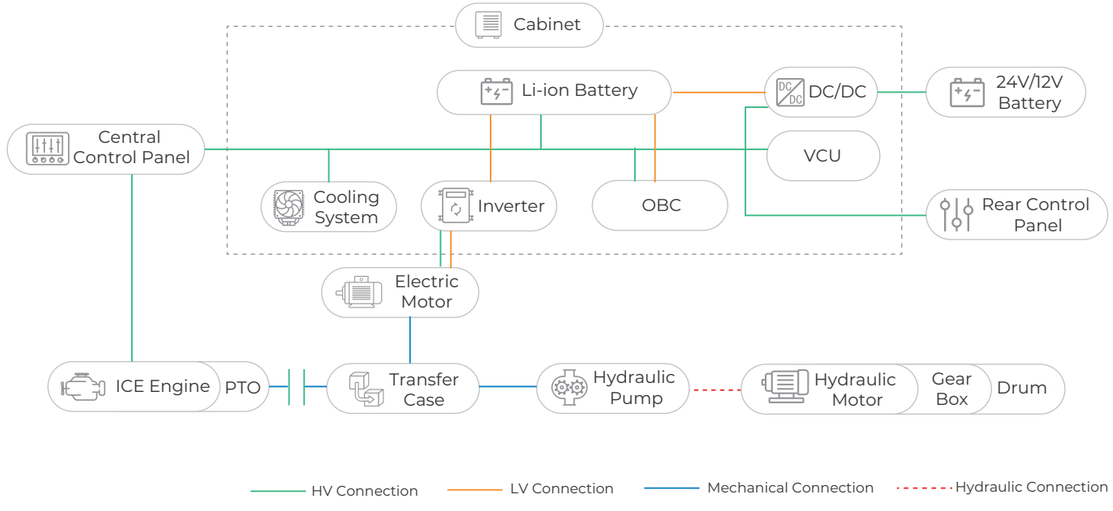

Design Philosophy for Mixer Truck

Energy consumption ratio of mixer truck

80% *Driving + electrical accessories + idle energy consumption*

20% *Energy consumption of drum rotation and pulley friction*

Path to reduce the energy consumption of mixer truck

- Reduce idle operation
- Improve the energy conversion efficiency of the upper mixer and reduce energy loss
- Improve engine fuel efficiency and reduce vehicle energy consumption during operation
- Reduce accessory energy consumption or reduce power consumption

Electric Consumption Calculation

- Assuming a same case,12m^3 (14 yard) drum
- Approx. 15 kWh battery is good for hybrid mixture based on customer operation conditions

Mixer Truck Opertion Steps	Loading	Wet / Dry Mix + Initial Cleaning	Transport to Job Site	Idling	Mixing	Pouring	Washing / Cleaning	Transport to Batch Plant	Total Generating (kWh)	Total Consumption (kWh)
Truck Opertion Time (Min)	5.80	9.71	20.13	20.68	4.80	19.03	16.83	21.67		
Drum Speed (rpm)	8.00	8.00	2.00	2.00	12.00	8.00	8.00	2.00		
Generator Agv. Torque (Nm)	\	\	120.00	\	\	\	\	120.00		
Generator Agv. Speed (rpm)	\	\	1400.00	\	\	\	\	1400.00		
Generator Agv. Power (kW)	\	\	17.59	\	\	\	\	17.59		
Generator Agv. Capacity (kWh)	\	\	5.90	\	\	\	\	6.35	12.25	
Drum Drive Motor Agv. Torque (Nm)	20.00	30.00	25.00	25.00	40.00	20.00	10.00	10.00		
Drum Drive Motor Agv. rpm (Nm)	3942.00	3942.00	985.50	985.50	5913.00	3942.00	3942.00	985.50		
Drum DriveMotor Agv. Power (kW)	8.26	12.38	\	2.58	24.77	8.26	4.13	\		
Actual Drum Drive Motor Agv. Power(kW)	12.71	19.05	\	3.97	38.11	12.71	6.35	\		
Drum Drive Motor Agv.Consumption (kwh)	1.23	3.08	\	1.37	3.05	4.03	1.78	\		14.54
SOC 25%-85% (if 14.6 kWh)	60%	38.9%	85%	75.6%	54.7%	27.1%	14.9%-25%	68.5%		
			If the battery is fully charged, the generator may stop			When the battery level is too low, the generator automatically starts		If the battery is fully charged, the generator may stop		

Drum Gear ratio: **135.00** Motor Gear Ratio: **3.65** Power Calculate Factor: **9550.00** Hydraulic Pump Efficiency: Plunger pump: **90%**, Gear pump: **65%**

Axial Flux Motor



90% High efficiency

Over 90% efficiency across a wide operating range for higher utilization and lower energy consumption.

Compact and Lightweight

150 mm axial size, 39 kg weight—same as the original hydraulic motor. Easy to install, ensures stable drum rotation, and reduces mechanical stress.

High Protection

IP68/IP69-rated axial flux motor for reliable operation under harsh, heavy-duty conditions.

System Specification

Items	Spceifications
Rated Power (kW)	23.5
Rated Torque (Nm)	300
Rated Voltage (Vdc)	320
Peak Power (kW)	37
Peak Torque (Nm)	520 (30s)
Max. Speed (rpm)	1,800
Rated Speed (rpm)	800
Cooling Method	Coolent Cooling
IP Grade	IP68
Ambient Temperature (℃)	-40~65
Working Duty	S9
Insulation Level	H
Weight (kg)	33±1 (Excluding Installation Flange)

Note: All data are based on ROYPOW standard test procedures, actual performance may vary according to local conditions.

Power Cabin

Battery system + Generator control system

Motor control system + Battery cooling system

Remote control system + Air conditioner



Integrated Design

Equipped with the control system, battery cooling system, remote control system, and on-board air conditioning without changing the position and structure of the vehicle cab.

Large Battery Capacity

Supports up to 2 hours of operation with A/C on or 3 hours without when parked, enhancing adaptability to working conditions and improving fuel efficiency.

Safe Voltage Platform

Operates on a low-voltage system, below the standard 220V household level.

Low-Temp Liquid Cooling

Keeps the battery around 25℃ in summer, reducing energy decay and extending battery life.

Intelligent Control

Smart battery charging and discharging reduces engine idle energy consumption.

System Specification

System	Componet	Specification
Power Cabinet	All-In-One Controller	Inverter+OBC+DCDC+PDU
	Battery	292V / 14.6 kWh
	VCU (Optional)	Central Brain of Mixer Control
	Wiring Harness	HV Wiring Harness,, LV Wiring Harness, GND Wire
Dimension (L x W x H, mm)		870 x 610 x 900
Weight (kg)		190

Note: All data are based on ROYPOW standard test procedures, actual performance may vary according to local conditions.

NCM Battery Pack

- Efficient Liquid Cooling
- 3C Discharge Rate for Demanding Loads
- IP67 Ingress Rating
- Intelligent Charging and Discharging Control



System Specification

Cell & Pack	Spceifications
Cell Chemistry	NCM
Cell Capacity (Ah)	50Ah
Cell Voltage (Vdc)	3.6
Pack Structure	1P40S
Pack Capacity (kWh)	7.3
Pack Voltage (Vdc)	144
Pack Size (L x W xH, mm)	725 x 517 x 250
Weight (kg)	≤65
SOC Range (%)	25~85
Charge C cate	2C
Discharge C cate	3C
Cooling Method	Coolant Cooling + Heating
IP Grade	IP67
Altitude (m)	≥4000

Note: All data are based on ROYPOW standard test procedures, actual performance may vary according to local conditions.

All-In-One Controller

Inverter + DC-DC + OBC + PDU

- Automotive-Grade Reliability
- IP67 Ingress Rating

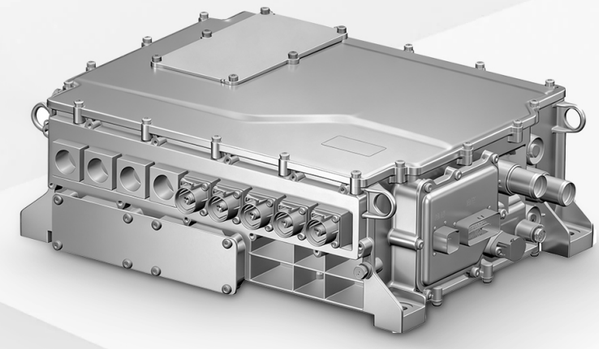

System Specification

System	Componet	Specification
Power Cabinet	Integration	Inverter + DC-DC + OBC + PDU
	Rated Voltage (Vdc)	320
	Rated Power (kW)	40
	Peak Power (kW)	65
	Rated Current (Arms)	120
	Peak Current (Arms)	230
	Efficiency (%)	98%
	Frequency (Hz)	0-800
OBC	Input Voltage (Vac)	85~265
	Ouput Voltage (Vdc)	260~500
	Rated Power (kW)	6.6
DCDC	Input Voltage (Vdc)	260~500
	Ouput Voltage (Vdc)	13.8±0.138
	Rated Power (kW)	3
Others	Cooling Method	Coolent Cooling
	Ambient Temperature (℃)	-40~65
	IP Grade	IP67
	Weight (kg)	20±5%
	CAN Communication	Customized

Note: All data are based on ROYPOW standard test procedures, actual performance may vary according to local conditions.



Original Vehicle Information



Model	XCMG XGS28K
Rated Power of Engine	48kW (2400r/min)
Engine Model	YCF3065-T482
Total Weight	18300 kg
Maximum Driving Speed	6.1km/h
Maximum Climbing Gradient	40%

Benchmark Vehicle Information



Model	Specification
Model	Zoomlion ZT28JE-V
Lifting Motor Rated Power/Speed/Torque	25.4kW/1620rpm/150Nm
Travel Motor Rated Power/Speed/Torque	5.2kW/2792rpm/18Nm (4WD)
Total Weight	17,900kg
Battery	80V/606Ah
Charger	6kW/80V
Driving Speed (Stowed State)	5.5km/h
Maximum Climbing Gradient	45%
Auxiliary Power	12V DC

Engine Information

Items	Xinchai 4D32Y41P602 / Yuchai F3065-T480		
Model	XCMG XGS28K	Series	TCD 2.2/2.9
Total Power / Speed	48kW / 2200rpm	Number of Cylinders	4
Torque / Speed	260 Nm / 1,600 rpm	Bore	92mm
Displacement	3L	Stroke	110mm
Fuel Tank Capacity	130L	Displacement	2.9L
Hydraulic Oil Tank Capacity	130L	Maximum Speed	2,600 rpm
Main Pump Type	Variable Displacement Piston Pump	Power Output	55.4kW
Main Pump Flow	167L/min	Maximum Torque	260Nm
System Pressure	28MPa	Minimum Idle Speed	900rpm
Emission Standards	EU V, US T4f, EU IIIB	Dimension (L x W x H)	648 x 560 x 685 mm
Weight	237 kg		

Note: All data are based on ROYPOW standard test procedures, actual performance may vary according to local conditions.

Electrification Retrofitting - System Architecture Design

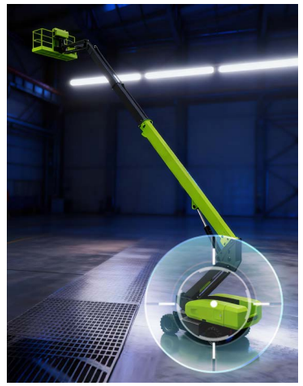

Safe and Reliable

Matured vehicle-level electric system (battery/motor/controller) and protection measures ensure real-time protection for the driver's property and personal safety

High-Performance and Efficient

All-in-one controller with PMSM offers high power density, wide efficiency range, compact and lightweight design, safe and reliable, with ~3% higher efficiency than similar PMSMs.

Long Battery Life

Compact axial flux motor saves space for a large-capacity lithium battery; fast charging supports 10–12 hours per cycle.

Electrification Retrofitting

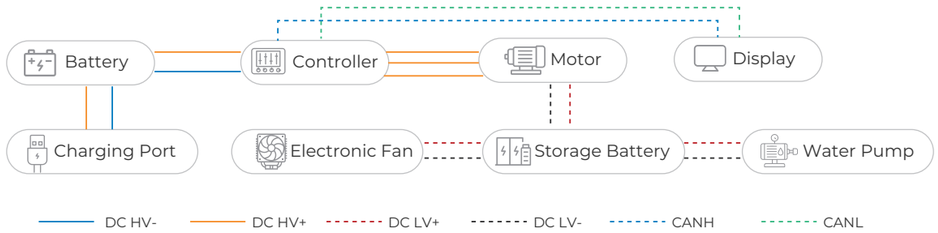

High-Voltage Channel

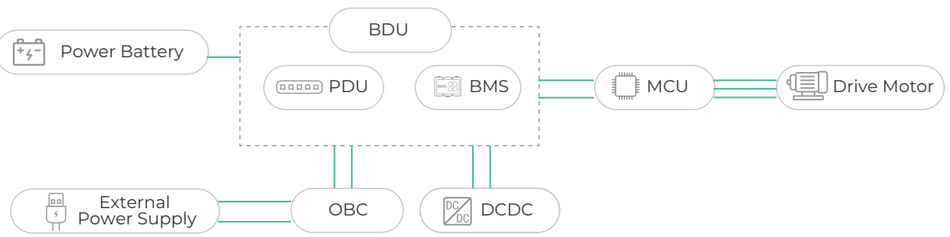

Low-Voltage Channel

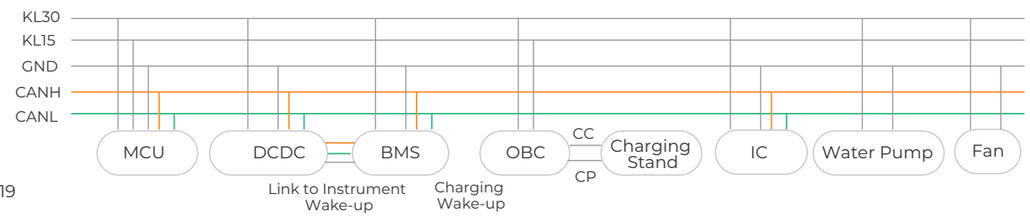

PMSM Motor



Small Size

40% smaller than radial motors of the same power and torque

Light Weight

60% lighter than radial motors of the same power and torque

Fast Response

Motor rotor moment of inertia is only 0.04

Wide Efficiency Range

The range where motor efficiency is greater than 90% accounts for more than 90%

System Specification

Items	Spceifications
Model	ICS120K
Motor Type	PMSM
Cooling Type	Water-cooled Motor
Rated/Peak Power	24/48kW
Rated/Peak Torque	150/300Nm
Number of Pole Pairs	8
IP Level	IP68
Motor Dimensions	343 x 147 x 508 mm
Motor Weight	38kg

Note: All data are based on ROYPOW standard test procedures, actual performance may vary according to local conditions.

Motor Controller / Inverter

Core Algorithm
Optimizes energy utilization for greater power efficiency

Safe & Reliable
Features comprehensive protection against short circuits, overheating, resolver disconnection, and insulation faults

DC-DC Converter
Charges the low-voltage battery to support the stable operation of all vehicle electronics

ACR Control
Delivers smooth torque output for an enhanced driving experience

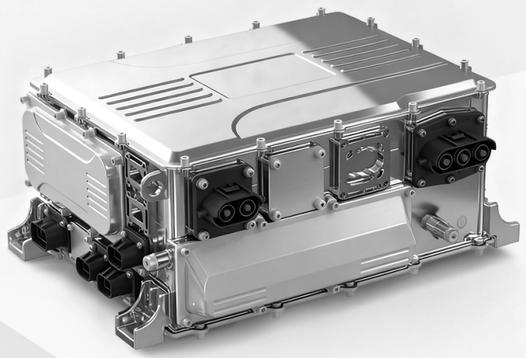

System Specification

Items	Spceifications
Integration	Inverter + DC-DC + PDU
Rated Voltage (Vdc)	144
Rated Power (kW)	40
Peak Power (kW)	65
Rated Current (Arms)	120
Peak Current (Arms)	230
Efficiency	98%
Frequency	0~800Hz
Cooling Method	Water-Cooled

Note: All data are based on ROYPOW standard test procedures, actual performance may vary according to local conditions.

Lithium Battery

High Energy Capacity & Power Output
Ensures prolonged operation between charges and reliable performance even under heavy loads.

Enhanced Safety & Durability
Designed cooling and heating systems minimize thermal stress on battery cells, reducing the risk of thermal runaway, cell degradation, or structural damage.

Real-time Diagnostic Capabilities
Sophisticated diagnostic system that continuously monitors key parameters such as cell voltage, internal resistance, temperature distribution, and charge/discharge cycles.



System Specification

Items	Spceifications
Rated Energy (kWh)	43
Rated Voltage (Vdc)	153.6
Rated Capacity (Ah)	280
Continuous Discharge/Charge Power (kW)	43
Weight (kg)	350±15
Dimensions (mm)	1260 x 465 x 533

Note: All data are based on ROYPOW standard test procedures, actual performance may vary according to local conditions.

On-Board Charger

High Power Density

Small size, light weight, high efficiency, long life time, high reliability, and strong seismic resistance.

Full Protection Function

Input over/under voltage protection, output over/under voltage protection, output short circuit protection, and over-temperature protection, etc.

Intelligent Digital Control

Fully digital control technology, with flexible and intelligent control, good protection characteristics, and strong system robustness.

System Specification

Items		Specification Parameters
Spec	Model	Charger
	Rated Output Voltage	144V
	Charging Mode	Controlled by CAN
Input	Rated Input Voltage	220VAC
	Rated Input Voltage Frequency	50Hz
	Inrush Current	≤32A
	Input Power Factor	≥0.99 (@220Vin, Pomax)
Output	Rated Output Power	6.6kW
	Output Voltage Range	50-180V (Controlled by Communication)
	Output Current Range	0~44A (Controlled by Communication)
	Voltage Regulation Accuracy	≤1%
	Voltage Ripple Coefficient	≤1%
	Current Regulation Accuracy	≤5%
	Output Response Time	≤5S
	Typical Efficiency	≥94%

Note: All data are based on ROYPOW standard test procedures, actual performance may vary according to local conditions.

Control Display

Wide Voltage Input

The input power supply supports a wide voltage input, applicable to 12V and 24V scenarios.

High Integration

Supports digital signals, analog signals, pulse signals, etc.

Flexible Configurations

Optional functions such as voice broadcast, video input, 4G, and positioning.



System Specification

Items	Spceifications
CAN Communication Port * Baud Rate (kb)	CAN2.0A/B * 125kb
Current Consumption (mA)	≤300
Operating Voltage (Vdc)	32
Resolution	800*480
IP Level	IP65
Weight (kg)	0.73
Dimension (inch)	7-inch, 24-bit

Note: All data are based on ROYPOW standard test procedures, actual performance may vary according to local conditions.



Vehicle Information



Model	CAT325
Rated Power of Engine	129.4kW
Engine Displacement	4.4L
Operating Weight	28,500kg
Bucket Capability	1.19m³
Dimensions	8890 x 2980 x 3080
Maximum Traction Force	201kN
Climbing Ability	35° (70%)
Fuel Tank Capacity	313L

Topology for Hybrid Application

Reel cable version + AC motor

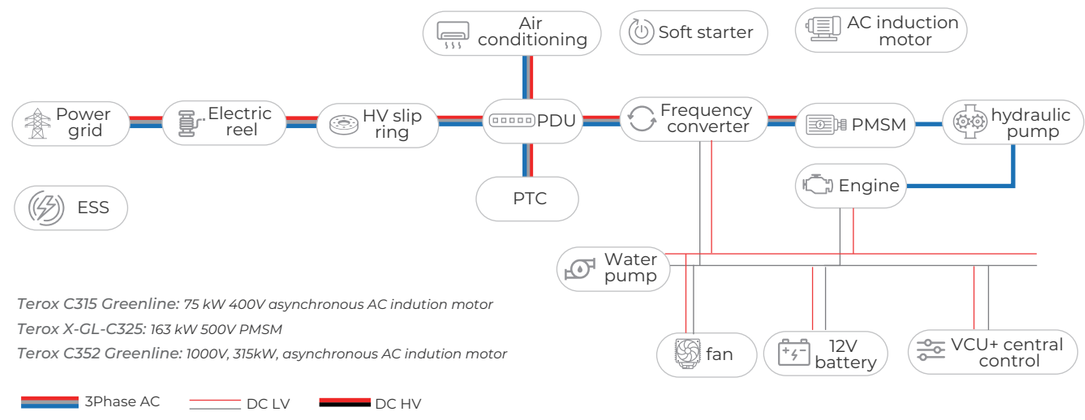

Terox C315 Greenline: 75 kW 400V asynchronous AC indution motor
Terox X-GL-C325: 163 kW 500V PMSM
Terox C352 Greenline: 1000V, 315kW, asynchronous AC indution motor

Original Requirement

Updated solution for next-generation products

A hybrid system retrofitted to a pure electric system

Remove the engine and the related system

Add the battery

Battery capacity does not need to be large

Use an asynchronous induction motor or PMSM

With a cable connection to network/grid

AC input: 400V/455A or 1000V/250A network

With an electric thermal control system and air conditioning

Usually works with cable power; occasionally runs on battery power

Topology for EV Application

Reel cable + battery version + AC induction Motor

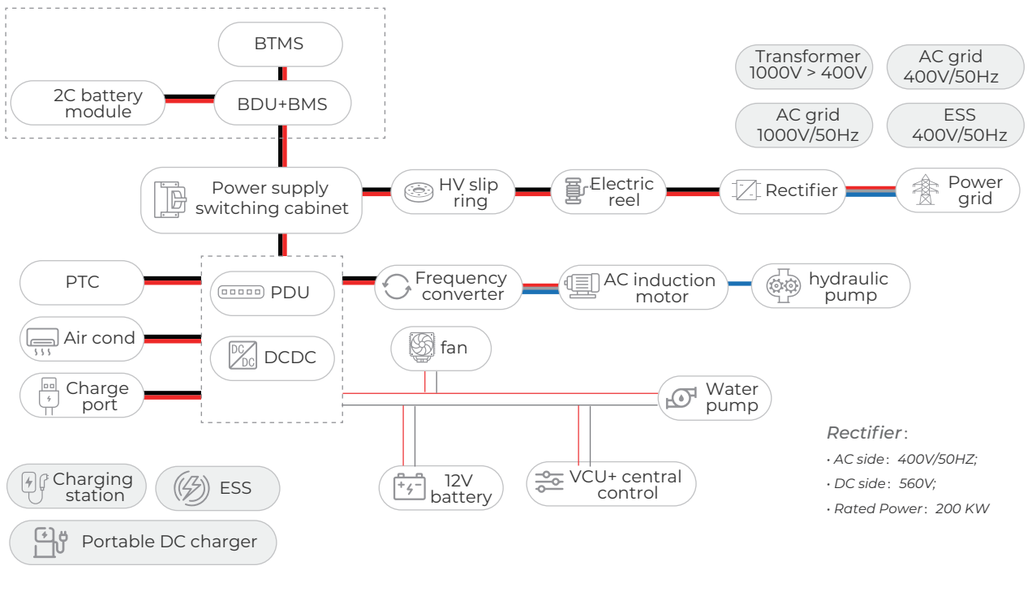

Rectifier:

- *AC side: 400V/50HZ;*
- *DC side: 560V;*
- *Rated Power: 200 KW*

* AC induction motor could be replaced by PMSM for higher efficiency

Topology for EV Application

Reel cable + battery version + PMSM

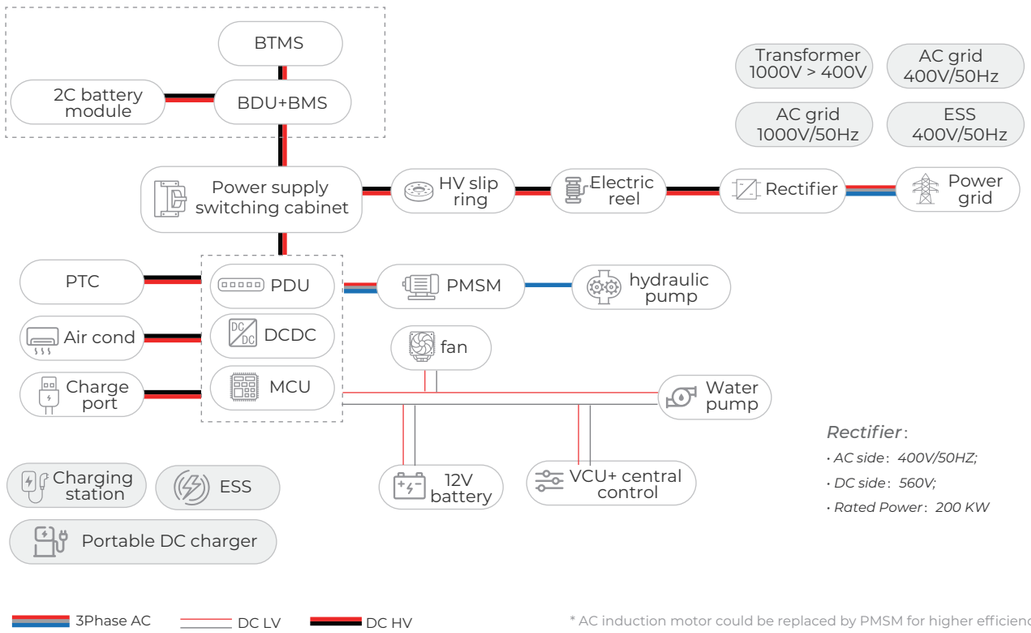

Rectifier:

- *AC side: 400V/50HZ;*
- *DC side: 560V;*
- *Rated Power: 200 KW*

* AC induction motor could be replaced by PMSM for higher efficiency

PMSM Motor



Compared to AC induction motor:

- 15~20% higher efficiency
- Lighter and smaller, ideal for space-limited excavators
- Widely applied with proven reliability and durability
- Built to meet the requirements of automotive-grade standards
- Real-time CAN communication for better thermal and safety protection

System Specification

Items	Spceifications
Rated Power (kW)	150
Rated Torque (Nm)	800
Rated Speed (rpm)	1790
Peak Power (kW)	250
Serial Parallel Number (Nm)	1500
Maximum Speed (rpm)	3000
Rated Voltage (Vdc)	600
Insulation Level	H
Cooling Method	Water-Cooled
IP Grade	IP68
Ambient Temperature (℃)	-40~85
Number of Phases	3
Winding Connection	Star (Y) Shape
Weight (kg)	188

Note: All data are based on ROYPOW standard test procedures, actual performance may vary according to local conditions.

Lithium Battery

System Specification

Cell & Pack

Cell Chemistry	LFP
Cell Capacity (Ah)	95
Cell Voltage (Vdc)	3.22
Cell Voltage Range (Vdc)	2.5~3.65
Cell Size (mm)	28.8 T x 202.6 W x 173.9 H
Pack Structure (Ah)	1P81S
Pack Capacity (kWh)	24.77
Pack Size (mm)	1080 x 660 x 243
Weight (kg)	221.5
Energy Density (Wh/kg)	>107
Charge C Rate / Discharge C Rate	Continuous 3C, 30s Pulse 6C
Cooling Method	Coolant Cooling + Heating
IP Grade	IP68

Battery System

Rated Energy (kWh)	49.55
Rated Voltage (Vdc)	521.64
Serial Parallel Number	2*D02 (1P162S)
Rated Capacity (Ah)	95
Energy Density (Wh/kg)	117.81
Operating Temperature (℃)	Charge: 0~65℃; Dishcarge: -35~65℃
SOC Range	20%~100%
BOL Maximum Continuous Charge / Discharge Current (A)	250 / 285
BOL Short-Term Peak Recharge / Discharge Current (A)	500A@30s
Self Discharge Rate	<3.5%/Month

Note: All data are based on ROYPOW standard test procedures, actual performance may vary according to local conditions.

Portable DC Charger

- Simple Operation & Convenient Installation
- Efficient, Reliable and Stable Performance
- 4.3-inch Friendly Interaction Interface
- Integrated Overload Protection
- Up to 30KW Optional



System Specification

Items	Spceifications
Charger Capacity	20kW
AC Supply System	Three-Phase, 5-Wire AC System
Nominal Input Voltage	AC380V±15%
Input Frequency	45~65Hz
Number of Outputs	DC200~750V
Output Current	Max. 80Amp
Output Connector Compatibility	SAE J1772
Power Factor	≥0.99 (50% Load Above)
IP Grade	IP54
Cooling	Air Cooling
Ambient Temperature Range	-25~55℃
Storage Temperature	-40~70℃
Ambient Humidity	5~95%

Note: All data are based on ROYPOW standard test procedures, actual performance may vary according to local conditions.

Mobile Power Stations

Small-Size Mobile Power Station

120kWh / 209kWh / 418kWh



All-In-One

Integrated with high-quality 100Ah/314Ah LFP battery, intelligent BMS, EMS, PCS, TMS, fire protection system, on-board charging pile, EV charger, etc.

High Efficiency

The air and liquid cooling, along with smart EMS and BMS, enable stable, high-performance operation.

Flexible Configuration

Can work as an independent off-grid power station or be configured with a trailer chassis, along with an optional 18-30T tractor head.

Intelligent Management

Web/app monitoring and local touchscreen ensure real-time access and easy maintenance.

Ultimate Safety

Gas and water fire suppression for reliable safety. EMS and BMS prevent overcharge/discharge and enhance system protection.

Broad Applications

Supports the power needs of construction machinery, urban emergency systems, electric heavy-duty trucks, and new energy vehicles.

System Specification

Capacity	60kW-120kWh	60/80kW-209kWh		120kW/160kW-418kWh	
Battery System Specifications					
Battery Rated Capacity	120kWh	209kWh		418kWh	
System Rated Voltage	614.4V	665.6V			
System Voltage Range	537.6VDC~691.2VDC	582.4VDC~748.8VDC			
Battery Type	LFP 3.2 V / 100Ah	LFP 3.2 V / 314 Ah			
Battery Pack Series and Parallel Connection	1P16S-5kWh / 2P-209kWh@1 Cluster	1P52S-52.249kWh / 4S-209kWh@1 Cluster			
No. of Battery Cluster	2	1		2	
Max. Charge / Discharge Current	100A*2	157A		157A*2	
AC Parameters					
Rated Power	60 kW	60kW	80kW	120kW	160kW
Rated Voltage/Voltage	400V / 360-440V				
Working Frequency	50Hz / 60Hz (±5Hz)				
Rated Current	86.7A	86.7A	115.6A	173.4A	231.2A
THDI	3%				
General Parameters					
Dimensions	About 800 x 1600 x 1650 mm	About 900 x 2400 x 1650 mm		About 1900 x 2438 x 1650 mm	
Weight	1500kg	2500kg		4000kg	
Opening Mode	Side and Back Open				
Moving Mode	Cargo Van / Towable Chassis				
IP Protection	IP 54				
Operation Temperature	-20℃ ~ + 50℃				
Anti-Corrosion	C4				
Temperature Control Mode	Natural Cooling	Liquid Cooling (Pack) / Air Cooling (Electrical Compartment)			
Firefighting System	Gas-Based / Water-Based Fire Suppression + Emergency Ventilation				
Output	Integrated PCS, DC AC				
Output Interface	Aviation Plug / Copper Busbar / GB Outlet / Charging Pile				
Charging Gun	GB Single Gun (Customizable)				

All pictures shown are for reference only and data are based on ROYPOW standard test procedures. Actual performance may vary according to local conditions. Only authorized personnel are allowed to operate or make adjustments to the batteries. We reserve the right to make revisions as well as product alterations and improvements at any time without prior notice.

Mid-Size Mobile Power Station

250kW / 627kWh / 836kWh
500kW / 1045kWh / 1254kWh



All-In-One

Integrated with high-quality 314Ah LFP battery, intelligent BMS, EMS, PCS, TMS, fire protection system, on-board charging pile, EV charger, etc.

High Efficiency

The air and liquid cooling, along with smart EMS and BMS, enable stable, high-performance operation.

Flexible Configuration

Can work as an independent off-grid power station or be configured with a trailer chassis, along with an optional 18-30T tractor head.

Intelligent Management

Web/app monitoring and local touchscreen ensure real-time access and easy maintenance.

Ultimate Safety

Gas and water fire suppression for reliable safety. EMS and BMS prevent overcharge/discharge and enhance system protection.

Broad Applications

Supports the power needs of construction machinery, urban emergency systems, electric heavy-duty trucks, and new energy vehicles.

System Specification

Capacity	250kW-627kWh	250kW-836kWh	500kW-1045kWh	500kW-1254kWh
Battery System Specifications				
Battery Rated Capacity	627kWh	836kWh	1045kWh	1254kWh
System Rated Voltage	665.6V			
System Voltage Range	582.4VDC~748.8VDC			
Battery Type	LFP 3.2 V / 314 Ah			
Battery Pack Series and Parallel Connection	1P52S-52.249kWh / 4S-209kWh@1 Cluster			
No. of Battery Cluster	3	4	5	6
Max. Charge / Discharge Current	157A*3	157A*4	157A*5	157A*6
AC Parameters				
Rated Power	250 kW		500 kW	
Rated Voltage/Voltage	400V / 360-440V			
Working Frequency	50Hz / 60Hz (±5Hz)			
Rated Current	361A		722A	
THDI	3%			
General Parameters				
Dimensions	6058 x 2438 x 2591 mm			
Weight	15T	16T	18T	19T
Opening Mode	Side and Back Open			
Moving Mode	Flatbed Truck / Towable Chassis			
IP Protection	IP 54			
Operation Temperature	-20°C ~ + 50°C			
Anti-Corrosion	C4			
Temperature Control Mode	Liquid Cooling (Pack) / Air Cooling (Electrical Compartment)			
Firefighting System	Gas-Based / Water-Based Fire Suppression + Emergency Ventilation			
Output	Integrated PCS, DC AC			
Output Interface	Aviation Plug / Copper Busbar / GB Outlet/ Charging Pile			
Charging Gun	240kW Dual DC Charging Station;10kW AC Inverter; 360 Camera; 25T Flatbed Truck / 30T Full Trailer Chassis.			

All pictures shown are for reference only and data are based on ROYPOW standard test procedures. Actual performance may vary according to local conditions. Only authorized personnel are allowed to operate or make adjustments to the batteries. We reserve the right to make revisions as well as product alterations and improvements at any time without prior notice.



Large-Scale
Mobile Power Station

500kW / 1672kWh / 1881kWh / 2090kWh

All-In-One

Integrated with high-quality 314Ah LFP battery, intelligent BMS, EMS, PCS, TMS, fire protection system, on-board charging pile, EV charger, etc.

High Efficiency

The air and liquid cooling, along with smart EMS and BMS, enable stable, high-performance operation.

Flexible Configuration

Can work as an independent off-grid power station or be configured with a trailer chassis, along with an optional 30-50T tractor head.

Intelligent Management

Web/app monitoring and local touchscreen ensure real-time access and easy maintenance.

Ultimate Safety

Gas and water fire suppression for reliable safety. EMS and BMS prevent overcharge/discharge and enhance system protection.

Broad Applications

Supports the power needs of construction machinery, urban emergency systems, electric heavy-duty trucks, new energy vehicles, large-scale events, and off-grid power supply for large projects.

System Specification

Capacity	500kW-1672kWh	500kW-1881kWh	500kW-2090kWh
Battery System Specifications			
Battery Rated Capacity	1672kWh	1881kWh	2090kWh
System Rated Voltage	665.6V		
System Voltage Range	582.4VDC~748.8VDC		
Battery Type	LFP 3.2 V / 314 Ah		
Battery Pack Series and Parallel Connection	1P52S-52.249kWh / 4S-209kWh@1 Cluster		
No. of Battery Cluster	8	9	10
Max. Charge / Discharge Current	157A*8	157A*9	157A*10
AC Parameters			
Rated Power	500 kW		
Rated Voltage / Voltage	400V / 360-440V		
Working Frequency	50Hz / 60Hz (±5Hz)		
Rated Current	722A		
THDI	3%		
General Parameters			
Dimensions	6058 x 2438 x 2591 mm		
Weight	24T	25.5T	26.5T
Opening Mode	Side and Back Open		
Moving Mode	Towable Chassis		
IP Protection	IP 54		
Operation Temperature	-20℃ ~ + 50℃		
Anti-Corrosion	C4		
Temperature Control Mode	Liquid Cooling (Pack) / Air Cooling (Electrical Compartment)		
Firefighting System	Gas-Based / Water-Based Fire Suppression + Emergency Ventilation		
Output	Integrated PCS, DC AC		
Output Interface	Aviation Plug / Copper Busbar / GB Outlet/ Charging Pile		
Optional	320kW Charging Station (Except 2090kWh); 360 Camera; 400A STS (10-20MS); 200m Cable Reel, 43T Two-Axle Semi-Trailer Chassis		

All pictures shown are for reference only and data are based on ROYPOW standard test procedures. Actual performance may vary according to local conditions. Only authorized personnel are allowed to operate or make adjustments to the batteries. We reserve the right to make revisions as well as product alterations and improvements at any time without prior notice.



Large-Scale
Mobile Power Station
(DC Power Supply Solution)

1543kWh / 1929kWh / 2122kWh

All-In-One
Integrated with high-quality 314Ah LFP battery, intelligent BMS, EMS, PCS, TMS, fire protection system, on-board charging pile, EV charger, etc.

High Efficiency
The air and liquid cooling, along with smart EMS and BMS, enable stable, high-performance operation.

Flexible Configuration
Can work as an independent off-grid power station or be configured with a trailer chassis and a tracked system, along with an optional 30-50T tractor head.

Intelligent Management
Web/app monitoring and local touchscreen ensure real-time access and easy maintenance.

Ultimate Safety
Gas and water fire suppression for reliable safety. EMS and BMS prevent overcharge/discharge and enhance system protection.

Broad Applications
Supports the power needs of construction machinery, urban emergency systems, electric heavy-duty trucks, and new energy vehicles.

System Specification

Capacity	1543kWh	1929kWh	2122kWh
Battery System Specifications			
Battery Rated Capacity	1543kWh	1929kWh	2122kWh
System Rated Voltage	614.4V		
System Voltage Range	537.6Vdc~691.2Vdc		
Battery Type	LFP 3.2V / 314Ah		
Battery Pack Series and Parallel Connection	1P48S-48.23kWh / 4S-192.92kWh@1 Cluster		
No. of Battery Cluster	8	10	11
Max. Charge / Discharge Current	157A*8	157A*10	157A*11
General Parameters			
Dimensions	6058 x 2438 x 2591 mm		
Weight	22.5T	25.5T	27.5T
Opening Mode	Side and Back Open		
Moving mode	Towable Chassis		
IP Protection	IP54		
Operation Temperature	-20℃ ~ + 50℃		
Anti-Corrosion	C4		
Temperature Control Mode	Liquid Cooling (Pack) / Air Cooling (Electrical Compartment)		
Firefighting System	Gas-Based /Water-Based Fire Suppression + Emergency Ventilation		
Output	DC Power Supply		
Output Interface	Aviation Plug		
Optional	10kW AC Inverter, 360-Degree Camera, 30T Full Trailer Chassis / 43T Two-Axle Semi-Trailer Chassis / Tracked System		

All pictures shown are for reference only and data are based on ROYPOW standard test procedures. Actual performance may vary according to local conditions. Only authorized personnel are allowed to operate or make adjustments to the batteries. We reserve the right to make revisions as well as product alterations and improvements at any time without prior notice.